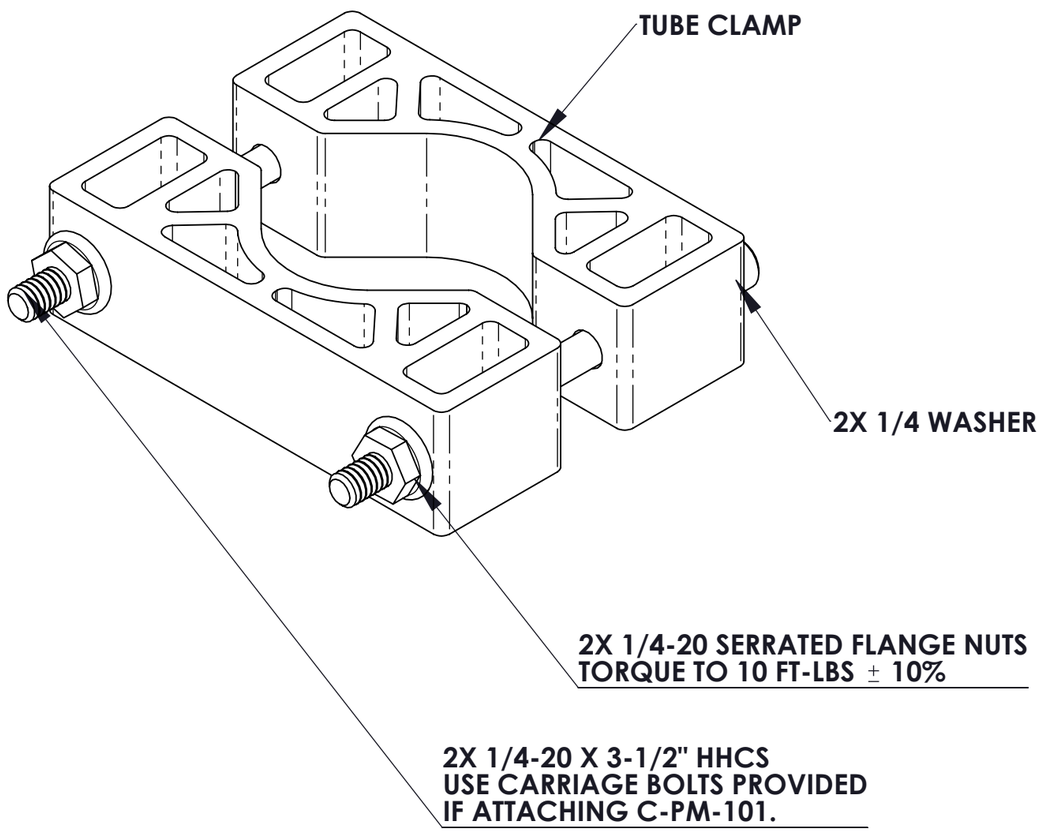

INSTALLATION INSTRUCTIONS:

1. PLACE THE 2 HALVES OF THE CLAMP AROUND THE TUBE AND HOLD THEM IN PLACE.

2. ASSEMBLE THE 2X 1/4 WASHER AND 2X 1/4-20 X 3-1/2 HHCS SCREWS THROUGH THE HOLES IN THE CLAMPS. IF ATTEMPTING TO MOUNT A C-PM-101 USE THE TWO CARRIAGE BOLTS INSTEAD OF THE HEX BOLTS. INSERT THE CARRIAGE BOLTS IN THE C-PM-101 THEN THROUGH THE TWO CLAMPS. GO TO STEP 4.

3. POSITION THE PRODUCT TO BE MOUNTED ONTO THE END OF THE SCREWS.

4. ATTACH THE 2X 1/4-20 SERRATED FLANGE NUTS TO THE END OF THE SCREWS. LEAVE LOOSE.

5. POSITION THE CLAMP ON THE TUBE AND TIGHTEN THE NUTS, MAKING SURE TO HAVE APPROXIMATELY EQUAL LENGTH OF BOLTS PAST EACH NUT.

6. CHECK THAT ALL FASTENERS ARE TORQUED TO 10 FT-LBS ±10%.

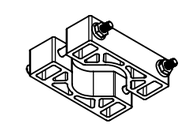

HARDWARE KIT CONTENTS:

DESCRIPTION	QTY.
1/4-20 SERRATED FLANGE NUT	2
1/4-20 x 3-1/2 HHCS	2
1/4-20 FLAT STEEL WASHER	2
1/4-20 X 3-1/2 CARRIAGE BOLT	2

PRODUCT I.D.: C-HDM-416
DATE: 3-3-10
PRODUCT NAME: TUBE CLAMP

DRAWING NUMBER:
C-HDM-416_INST

WARNING: IT IS THE SOLE RESPONSIBILITY OF THE OWNER/OPERATOR OF A VEHICLE WITH HAVIS MOUNTING AND DOCKING EQUIPMENT INSTALLED, TO PLACE AND SECURE THE EQUIPMENT SO IT WILL NOT INTERFERE WITH, VEHICLE OPERATING CONTROLS, SAFETY DEVICES, OBSTRUCT THE DRIVER'S VIEW OF DRIVING CONDITIONS OR CAUSE PERSONAL INJURY IN THE EVENT OF AN ACCIDENT.

PRODUCT DESCRIPTION
TUBE CLAMP BRACKET ALLOWS MOUNTING OF EQUIPMENT TO THE HAVIS C-HDM-200 SERIES POLES

HAVIS
215-957-0720
WWW.HAVIS.COM

WEIGHT: (LBS) 0.7
REV. DATE 3-3-10