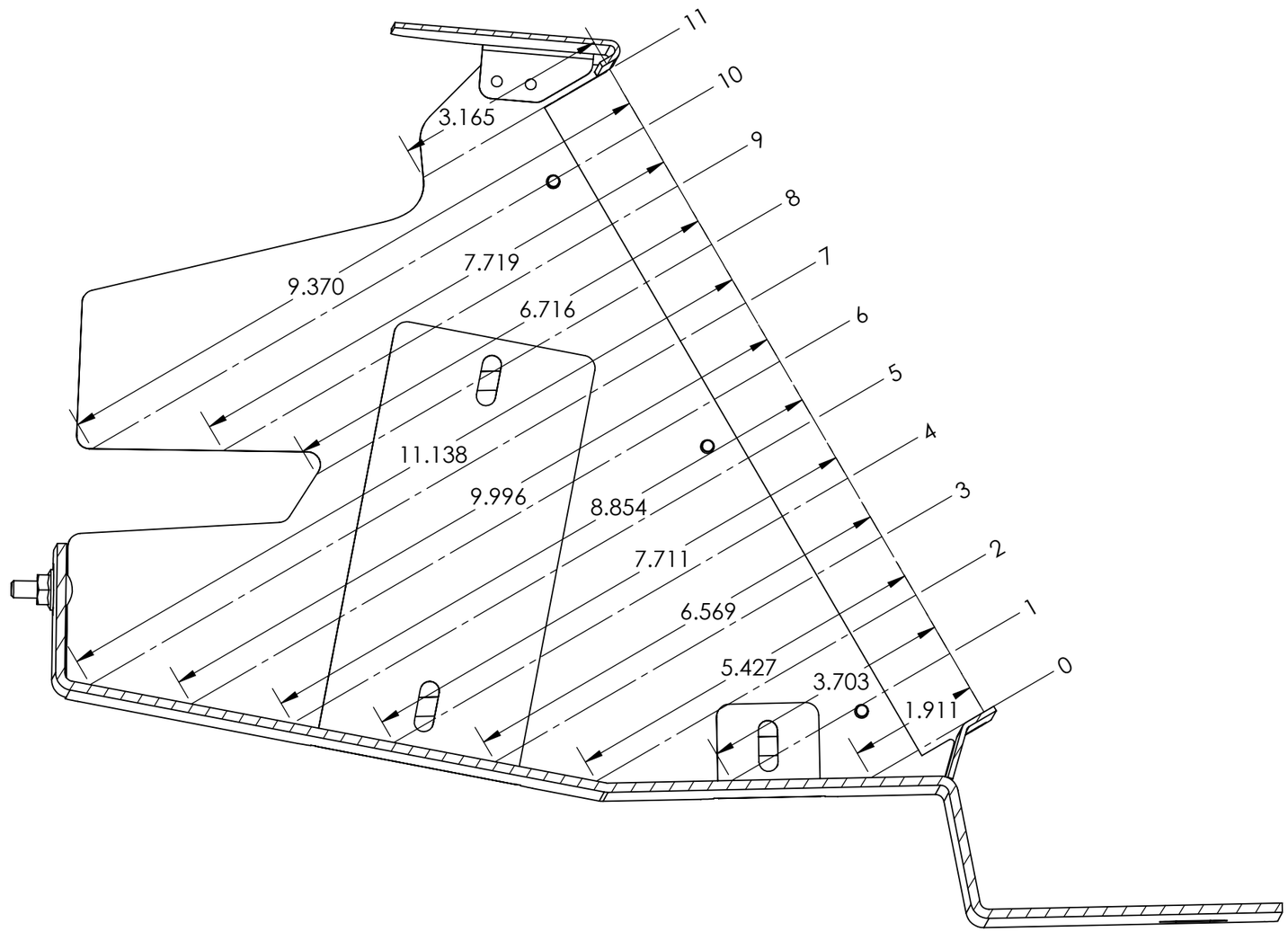
11
10
9
8
7
6
5
4
3
2
1
0
3.165
9.370
7.719
6.716
11.138
9.996
8.854
7.711
6.569
5.427
3.703
1.911