Owner's Manual
Havis Docking Station
For Panasonic TOUGHBOOK G2 Tablet

DS-PAN-720 Series

DS-PAN-721	DS-PAN-722	DS-PAN-723
DS-PAN-721-2	DS-PAN-722-2	DS-PAN-726

Havis, Inc.
75 Jacksonville Road
Warminster, PA 18974

DS-PAN-720-SERIES_OMN_7-21

Before Beginning

Havis is pleased to provide this Owner's Manual to aid in the proper installation and use of the DS-PAN-720 Series Docking Station for the Panasonic TOUGHBOOK G2 AND TOUGHBOOK G1 Tablets. For questions regarding the set-up of your DS-PAN-720 Series Docking Station, please contact Havis at 1-800-524-9900 or visit www.havis.com for additional product support and information.

This Owner's Manual applies to the following Part Numbers:

DS-PAN-721	DS-PAN-722	DS-PAN-723
DS-PAN-721-2	DS-PAN-722-2	DS-PAN-726

⚠WARNING

- **NEVER STOW OR MOUNT THE DOCKING STATION DIRECTLY IN A VEHICLE AIRBAG DEPLOYMENT ZONE.**
- **DO NOT USE COMPUTER WHILE DRIVING.**

- **NE JAMAIS RANGER OU INSTALLER LA STATION D'ACCUEIL DIRECTEMENT DANS LA ZONE DE DÉPLOIEMENT DES COUSSINS GONFLABLES D'UN VÉHICULE.**
- **NE PAS UTILISER L'ORDINATEUR EN CONDUISANT.**

⚠CAUTION

- **READ ALL INSTRUCTIONS THOROUGHLY BEFORE BEGINNING INSTALLATION.**
- **DO NOT STORE, INSTALL, OR OPERATE THE DOCKING STATION WHERE WATER, MOISTURE, STEAM, DUST, ETC. ARE PRESENT**
- **DO NOT DOCK OR UNDOCK YOUR COMPUTER UNLESS IT IS POWERED OFF. DOCKING OR UNDOCKING WITH YOUR COMPUTER IN ON, STANDBY, HIBERNATION, OR SLEEP MODES CAN CAUSE PERMANENT DAMAGE.**
- **FOR THE DS-PAN-721, DS-PAN-721-2, DS-PAN-722 & DS-PAN-722-2 DOCKING STATIONS: DO NOT CONNECT DIRECTLY TO VEHICLE VOLTAGE SOURCE: This product requires a certified, automotive grade, Panasonic approved 90W power source rated for a continuous, regulated 16VDC output (*Havis Part Number LPS-114 or equivalent*). Failure to comply with this requirement will cause product damage that is NOT repairable and is NOT covered under warranty.**
- **FOR THE DS-PAN-723 DOCKING STATION: DO NOT CONNECT DIRECTLY TO VEHICLE VOLTAGE SOURCE: The Panasonic TOUGHBOOK G2 Tablet requires a certified, Panasonic approved power source rated for a continuous, regulated 16VDC output. Failure to comply with this requirement will cause product damage that is NOT repairable and is NOT covered under warranty.**

- **LIRE ATTENTIVEMENT TOUTES LES INSTRUCTIONS AVANT DE COMMENCER L'INSTALLATION.**
- **NE PAS ENTRPOSER, INSTALLER OU UTILISER LA STATION D'ACCUEIL DANS UN ENDROIT OÙ DE L'EAU, DE L'HUMIDITÉ, DE LA VAPEUR,DE LA POUSSIÈRE, ETC. SONT PRÉSENTES**
- **NE CONNECTEZ OU DÉCONNECTEZ PAS VOTRE ORDINATEUR S'IL N'EST PAS ÉTEINT. LA MISE EN MARCHE OU L'ARRÊT DE VOTRE ORDINATEUR EN MODE MARCHE, VEILLE, HIBERNATION OU SOMMEIL PEUT CAUSER DES DOMMAGES PERMANENTS.**
- **POUR LES STATIONS D'ACCUEIL DS-PAN-721, DS-PAN-721-2, DS-PAN-722 ET DS-PAN-722-2 : NE PAS BRANCHER DIRECTEMENT À LA SOURCE DE TENSION DU VÉHICULE : Ce produit nécessite une source d'alimentation de 90 W certifiée de qualité automobile approuvée par Panasonic et conçue pour une sortie continue et régulée de 16 VDC (numéro de pièce Havis LPS-114 ou équivalent). Le non-respect de cette exigence entraînera des dommages au produit qui ne sont PAS réparables et qui ne sont PAS couverts par la garantie.**
- **POUR LA STATION D'ACCUEIL DS-PAN-723 : NE PAS BRANCHER DIRECTEMENT À LA SOURCE DE TENSION DU VÉHICULE : La tablette TOUGHBOOK G2 de Panasonic nécessite une source d'alimentation certifiée et approuvée par Panasonic, conçue pour une sortie continue et régulée de 16VDC. Le non-respect de cette exigence entraînera des dommages au produit qui ne sont PAS réparables et ne sont pas couverts par la garantie.**

NOTICE

- **FOR DOCKING STATION MODELS EQUIPPED WITH A BUNDLED POWER SUPPLY (DS-PAN-722, DS-PAN-722-3, & DS-PAN-726) REFER TO THE SUPPLIED LIND POWER SUPPLY REFERENCE GUIDE.**
- **WHEN TABLET IS DOCKED, THE BATTERY WILL ONLY CHARGE BETWEEN 0°C to 50°C (32°F to 120°F). PLEASE REFER TO PANASONIC TOUGHBOOK G2 OWNER'S MANUAL FOR MORE INFORMATION.**

Before Beginning

Precautions/Précautions

- Do not place metal objects or containers of liquid on top of the Docking Station
- If a malfunction occurs, immediately unplug the Power Supply and remove the laptop
- Use only the specified Power Supply (Part # LPS-114) with this Docking Station
- Do not connect cables into ports other than what they are specified for
- Do not leave the Docking Station in a high temperature environment (greater than 85°C, 185°F) for a long period of time

- Ne placez pas d'objets métalliques ou de contenants avec des liquides sur la station d'accueil
- En cas de dysfonctionnement, débranchez immédiatement l'alimentation électrique et retirez l'ordinateur portable
- Utilisez uniquement l'alimentation électrique spécifiée (partie # LPS-114) avec cette station d'accueil
- Ne pas connecter les câbles dans des ports autres que ceux spécifiés
- Ne laissez pas la station d'accueil dans un environnement à températurE élevée (plus de 85°C, 185°F) pendant une longue période

Specifications

Power Supply Input	16.0 V DC-In
Dimensions	10.0” (25.5 cm) H x 11.4” (28.9 cm) W x 4.4” (11.1 cm) D
Weight	2.55 lbs. (1.16 kg)
Operating Environment	-10° C to 50° C (14° F to 122° F)
Storage Environment	-40° C to 85° C (-40° F to 185° F)

EU DECLARATION OF CONFORMITY [CWN1]

Manufacturers Name: Havis, Inc.
Manufacturers Addresses: 47099 5 Mile, Plymouth Twp, MI 48170 USA
75 Jacksonville Road, Warminster, PA, 18974, USA

This declaration of conformity is issued under the sole responsibility of the manufacturer.

Product name: Docking Station For Panasonic FZ-G1 AND TOUGHBOOK G2 Tablet
Model: DS-PAN-72X, where ‘X’ may be any alphanumeric character and which describes product options.
May be followed by any alphanumeric characters which describe product options.
Product Options: This declaration covers all options of the above product which bear the CE Marking.

Is in conformity with the following directives, standards, or other normative documents:

UN ECE Regulation 10 UNECE Regulation 10.05, Paragraph 3.2.9; Clauses 6.5, 6.6, 6.7, 6.9; “Uniform provisions concerning the approval of vehicles with regard to electromagnetic compatibility”

EMC Directive 2014/30/EU EN 50498:2010, “Electromagnetic compatibility (EMC) - Product family standard for aftermarket electronic equipment in vehicles”

RoHS Directive 2011/65/EU EN 50581:2012, “Technical documentation for the assessment of electrical and electronic products with respect to the restriction of hazardous substances”

The object of the declaration described above is in conformity with Directive 2011/65/EU of the European Parliament and[CWN2] of the Council of 8 June 2011 on the restriction of the use of certain hazardous substances in electrical and electronic equipment.

Supplementary Information:
The object of the declaration described above is in conformity with the relevant Union harmonization legislation. This product requires the use of a recommended E Marked automotive power supply when used within vehicles.

Signed for and on behalf of Havis, Inc:

407995 Mile, Plymouth Twp, MI 48170, USA August 13, 2019 Bruce Jonik, Director of Engineering , Havis, Inc.

Parts Included

Docking Station

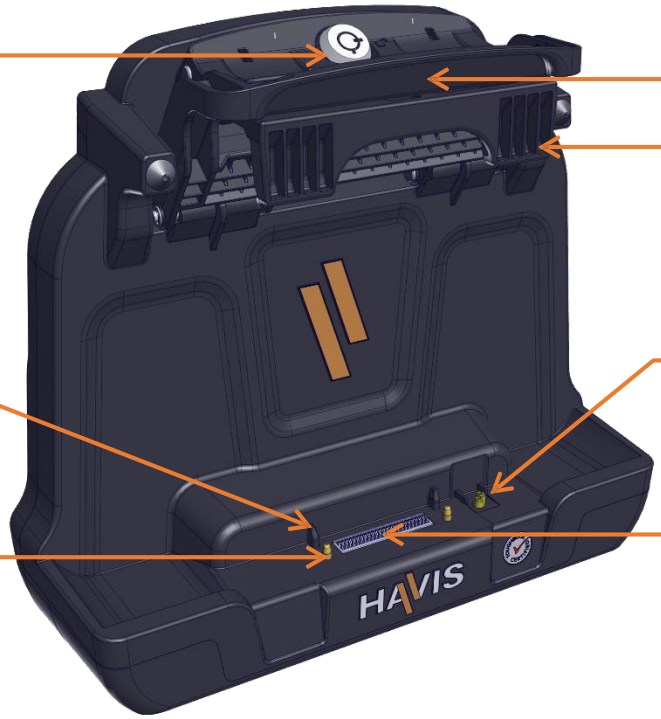

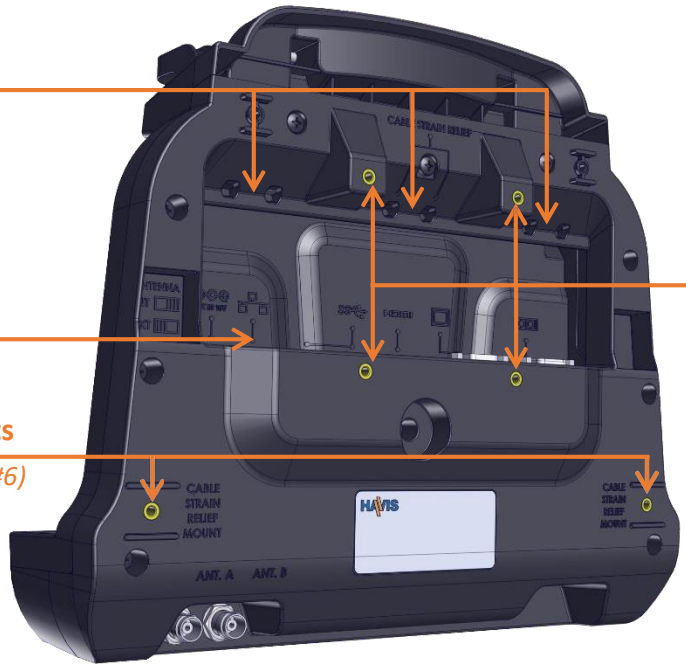

Parts Included *(continued)*

Hardware Kit *(HWK-0020)*

This Hardware Kit includes:

1. Zip Ties (6)
2. Keys (2)
3. M4 x 0.7 x 12mm long Pan Head Screws (7)
4. Washers, M4 (5)
5. Lock Washers, M4 (5)
6. Zip Tie Mounts (2)

Tools required for installation:

- #2 Phillips Screwdriver

(For attaching Docking Station to VESA 75mm hole pattern equipment with M4 Pan Head Screws)

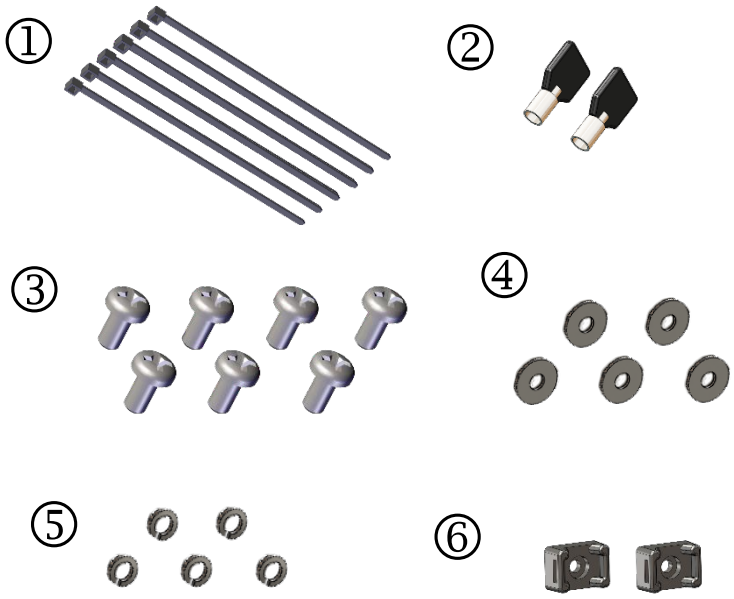

Antenna Identification

DS-PAN-721-2 & DS-PAN-722-2

A – PANASONIC LOWER
B – PANASONIC UPPER

Antenna Connectors (TNC)

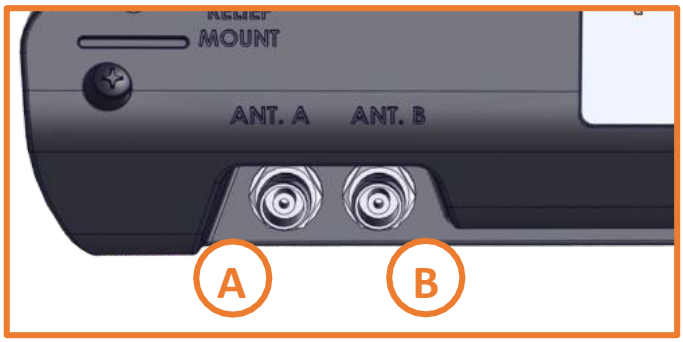

Tablet Interface

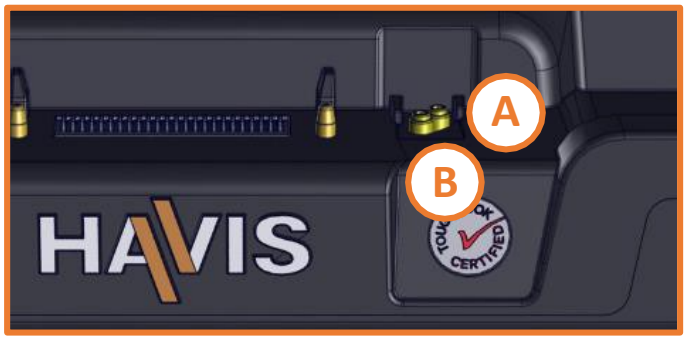

TOUGHBOOK G2 Tablet

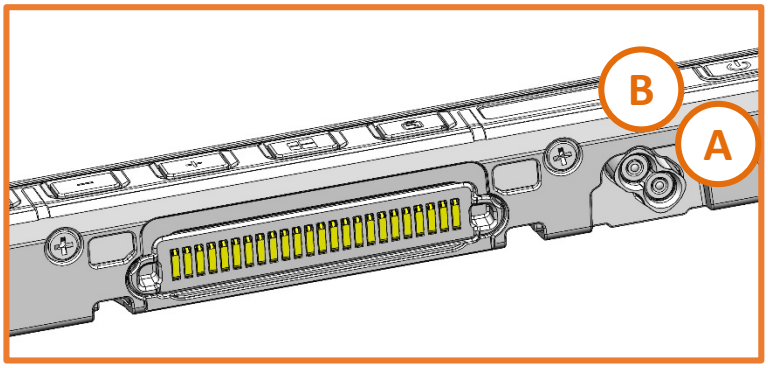

Port Replication Capability

DS-PAN-721, DS-PAN-721-2

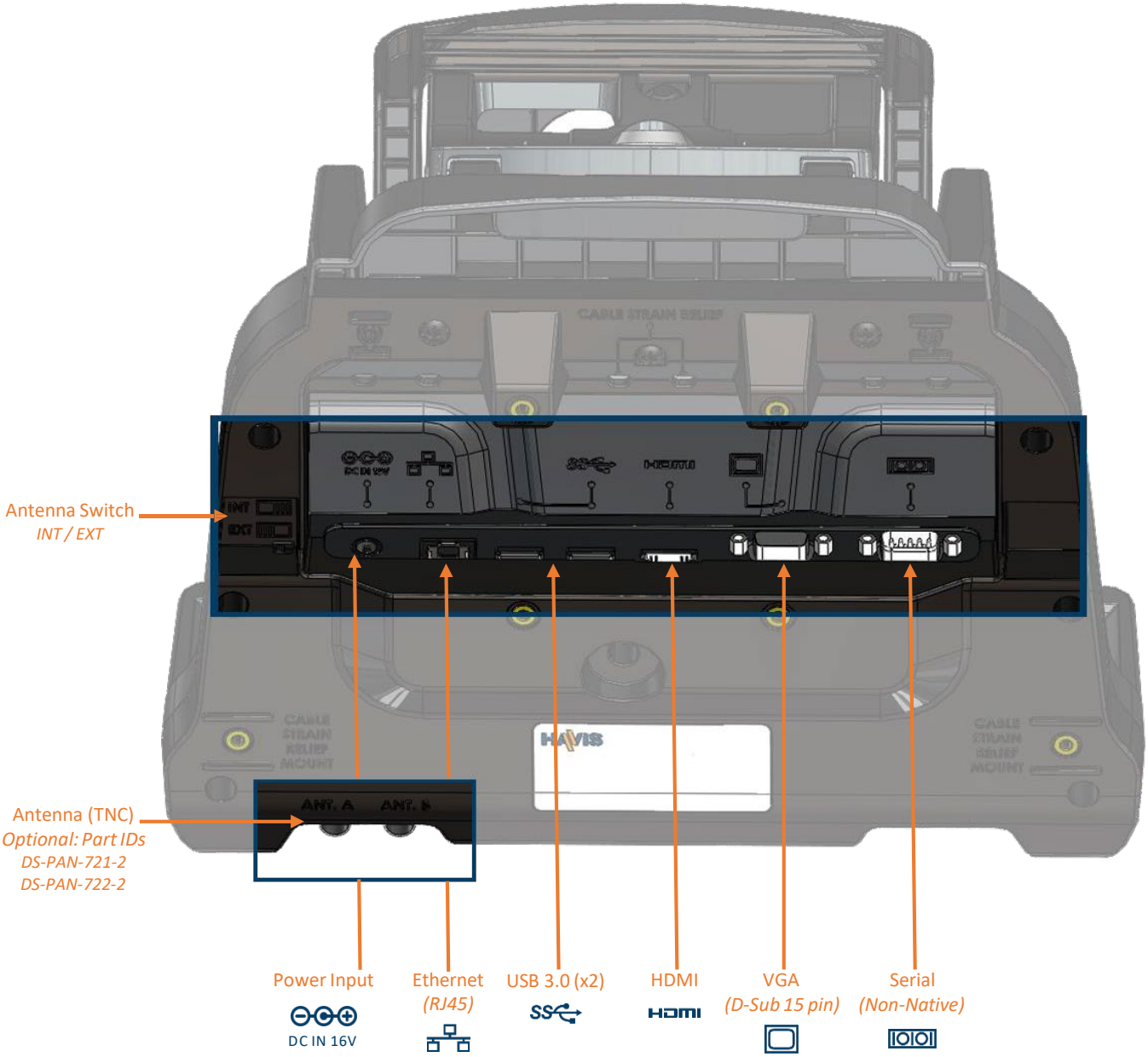

Installation

1) Align Docking Station mounting holes with the holes on VESA 75mm hole pattern device. Using the four (4) M4 x 0.7x12mm Pan Head Screws (Hardware Kit Item 3), four (4) Washers, M4 (Hardware Kit Item 4), and four (4) Lock Washers, M4 (Hardware Kit Item 5), secure the Docking Station to device. Torque screws to 20 in-lbs (2.3Nm) ± 10%.

A) Havis Desktop Stand installation *(sold separately, Part # DS-DA-218).*

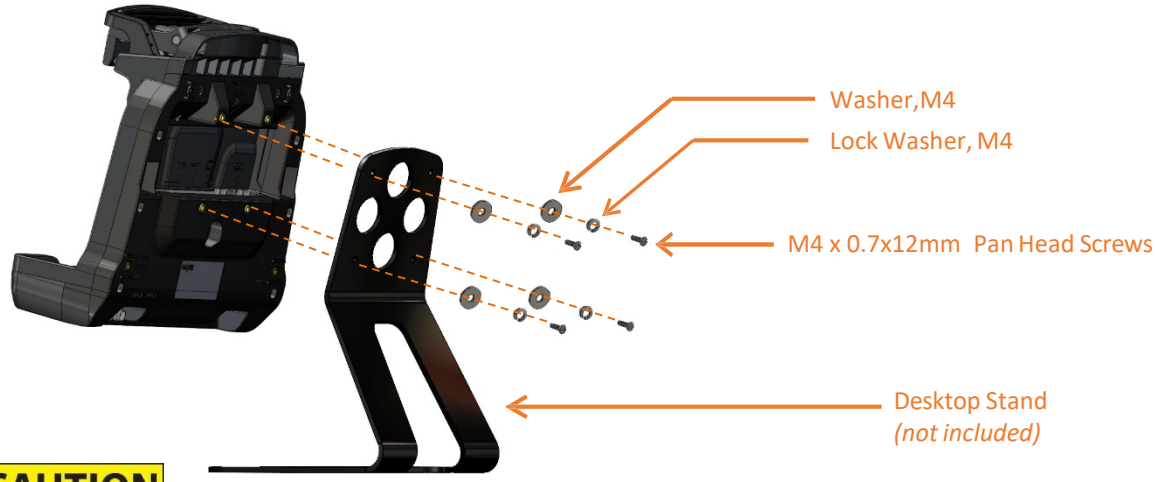

⚠CAUTION

ENSURE (4) WASHERS ARE INSTALLED BETWEEMOUNTING EQUIPMENT AND DOCKING STATION

'ASSURER QUE LES (4) RONDELLES SOIENT INSTALLÉES ENTRE LE MATÉRIEL DE MONTAGE ET LA STATION D'ACCUEIL

B) In-Vehicle mounting system installation.

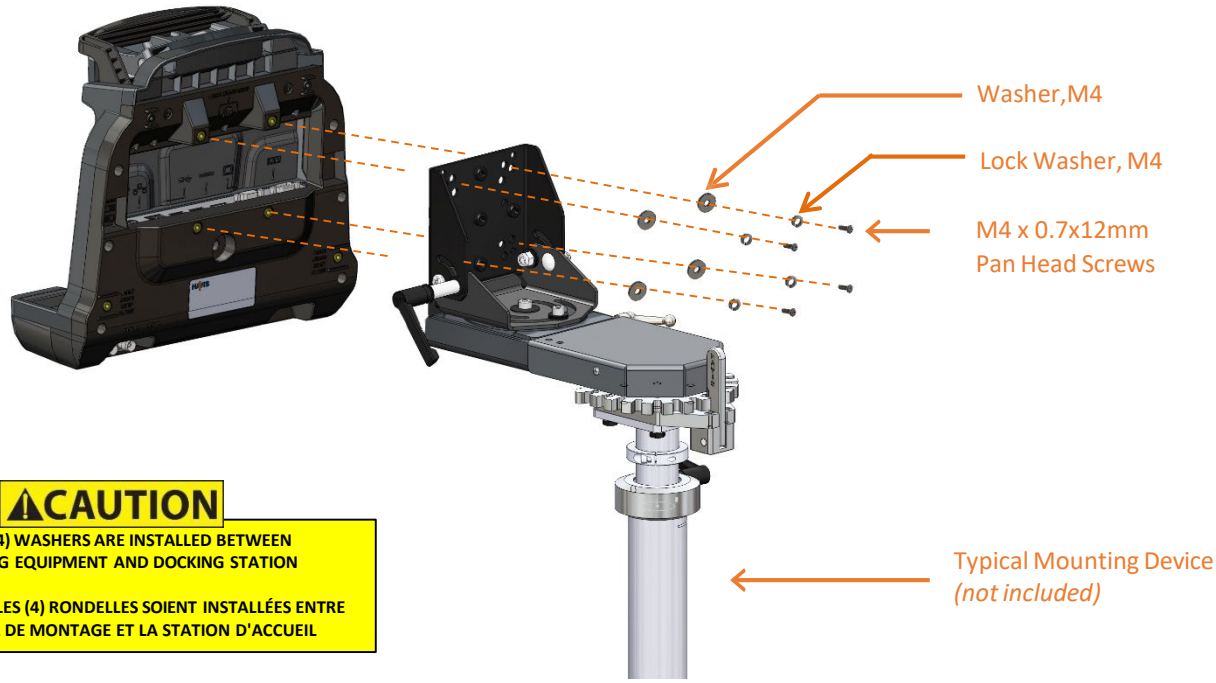

⚠CAUTION

ENSURE (4) WASHERS ARE INSTALLED BETWEEN MOUNTING EQUIPMENT AND DOCKING STATION

S'ASSURER QUE LES (4) RONDELLES SOIENT INSTALLÉES ENTRE LE MATÉRIEL DE MONTAGE ET LA STATION D'ACCUEIL

Cable Management

1) Tip the Docking Station to a position that is comfortable to work with.
2) Connect all cables that are necessary for computing needs.
3) Use Zip Ties (Hardware Kit Item 1) and/or Zip Tie Mounts (Hardware Kit Item 6) to strain relieve cables. Strain Relief Points are located above each port and on the bottom of Docking Station and should be used to anchor each cable.

4) Create a service loop with cables to ensue that no tension is on the connectors and to enable intended motion.
5) Tie off cables onto a stationary part of the mounting system.

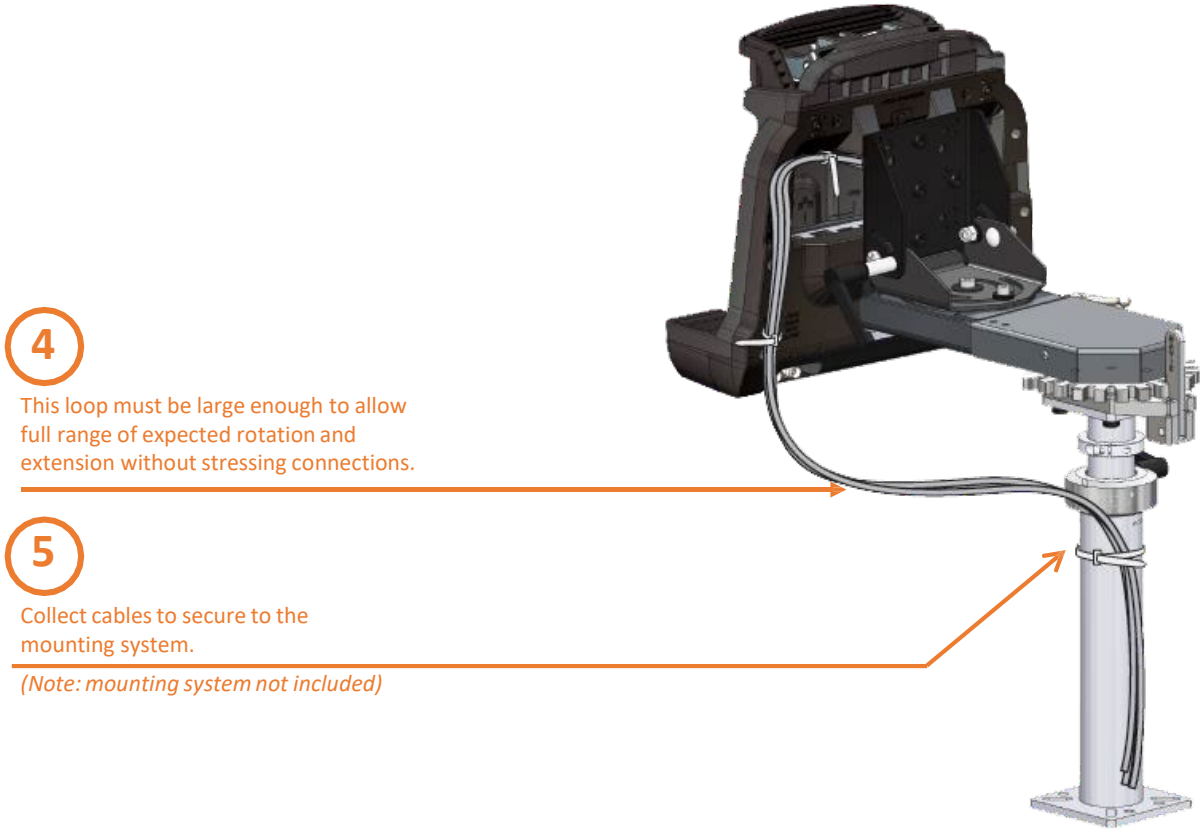

Operation - Docking

⚠CAUTION

TO ENSURE A PROPER CONNECTION, PLEASE READTHE FOLLOWING BEFORE DOCKING YOUR TABLET.

POUR ASSURER UNE CONNEXION ADÉQUATE, VEUILLEZ LIRE LES ÉLÉMENTS SUIVANTS AVANT D'INSTALLER VOTRE TABLETTE.

Hold your TOUGHBOOK G2 in landscape orientation, ensuring the Docking Connector is on the bottom. (NOTE: Power Button will be on the bottom right)

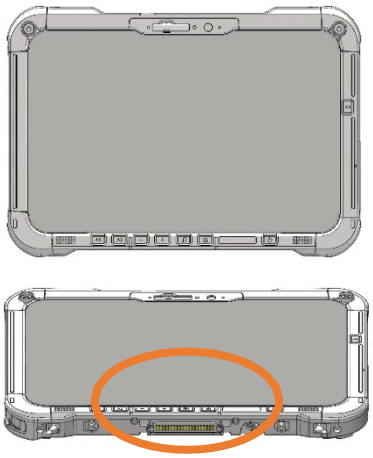

Your tablet's Alignment Grooves will align with the Docking Station's Alignment Posts.

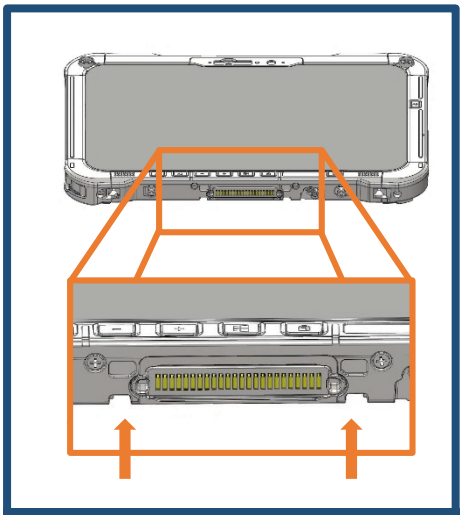

Alignment Grooves on the bottom of Panasonic TOUGHBOOK G2 Tablet.

Operation - Docking *(continued)*

1) Ensure Docking Station is unlatched by lifting the Latch Handle.

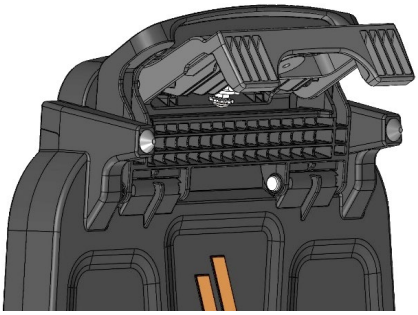

2) Hold tablet in landscape orientation, with bottom angled toward the Docking Station, aligning the tablet's Docking Connector with the Docking Station's Docking Connector. Lower tablet into the bottom of the Docking Station while ensuring that the alignment grooves are aligned with the Docking Station's Alignment Posts.

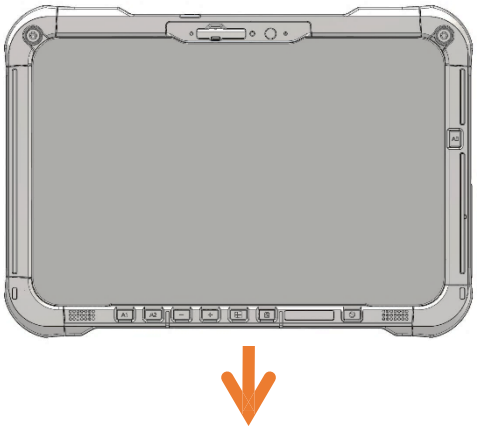

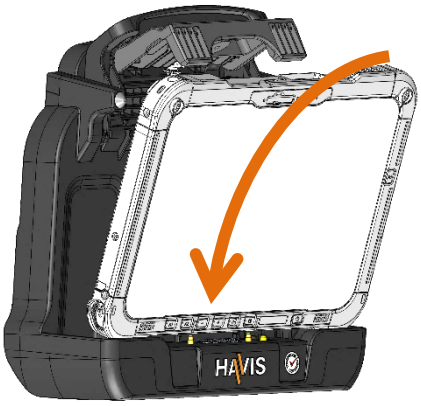

3) Pivot tablet so the top pushes against the Docking Station's rubber bumpers. While holding the tablet firmly against the bumpers, pull forward and down on the Latch Handle to secure tablet in place. NOTE: The Latch Handle will drive the Latch Hook over the front of the tablet. Pull the Latch Handle until it snaps into position.

Operation - Docking *(continued)*

4) For theft deterrence, secure tablet by locking Docking Station with the supplied key (Hardware Kit Item 2).

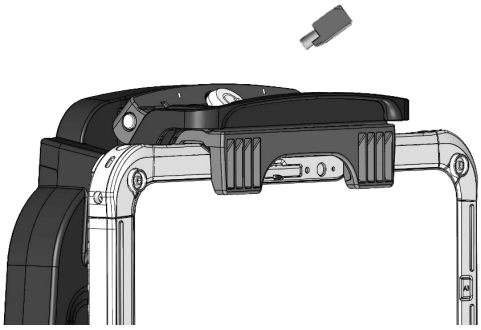

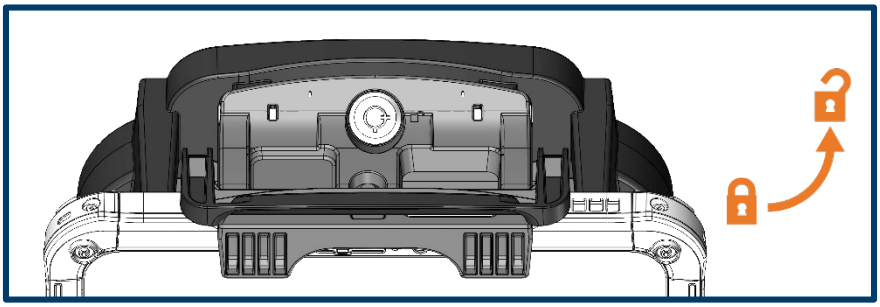

Operation - Undocking

1) If previously locked, unlock Docking Station using supplied key.

2) While holding tablet with one hand, lift only the Latch Handle up and rearward. Note that Latch Hook is spring loaded and will follow Latch Handle.

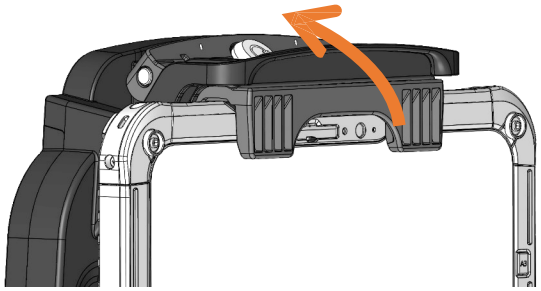

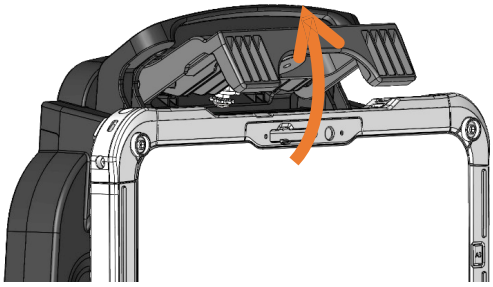

3) Once unlatched grab both sides of tablet, rock forward and carefully lift out of Docking Station, top end first.

Related Products

Havis offers a wide variety of accessory products specifically for use with your Docking Station. For more information or to order, please visit ***www.havis.com***.

LPS-114
90W Power Supply
External in-vehicle power supply and cable for Panasonic TOUGHBOOK G2 with cigarette lighter adaptor.

LPS-122
20-60V Isolated Power Supply
Isolated power supply for use in forklift applications to reduce electronic interference. 85W; 20-60 VDC input, 15 VDC output.

LPS-123
12-32V Isolated Power Supply
Isolated power supply for use in forklift applications to reduce electronic interference. 85W; 12-32 VDC input, 15 VDC output.

DS-DA-218
Desktop Stand for Tablet Docking Stations
Durable stand for mounting tablet Docking Stations for use in the home or office.

DS-DA-501
Replacement Keys
Set of two (2) replacement keys for DS-PAN-720 Series Docking Stations.