MM-1000 SERIES

MODULAR MOUNT FOR EXISTING POLE UPGRADES

The challenge for retailers, warehouses and distribution centers when implementing technology is how to maximize limited space to mount that technology, while ensuring it is ergonomic and easy to use. Installed modular mounting solutions are regularly upgraded to utilize new technology, however the user often has no choice on where they can source this upgrade.

The exciting news is that the new MM-1000 Modular Mounting solution from Havis gives the user complete solution options to manage the space at their checkout or workstation and also to upgrade existing installations.

The MM-1000 Modular Mount incorporates a new generation of engineered materials for a durable and strong, yet modern looking POS solution. Designed to be great value, easy to order, install and upgrade.

KEY FEATURES

- Uses the latest Engineered Polyamide Alloy materials for durability and industry leading design for today's markets
- Offers a cost-effective solution for upgrading existing Pole based POS systems and workstations
- Tool-less tilt tension adjustments on your Payment Terminal Mount

MM-1000 FOR EXISTING POLE UPGRADES

MONITOR MOUNT OPTIONS

OR

Single Pivot with Collar Mount OR Collar Arm*

OR

Double Pivot with Collar Mount OR Collar Arm*

*Extension Arm is 8" (200mm) Long

PAYMENT MOUNT + LOCKING OPTIONS

Payment Mount
*Extension Arm is 8" (200mm) Long

+

FlexiPole Backplate

+

If locking is required...

KEN00148
Tether

OR

SD0005
Latch

Supports all major payment devices:

ingenico a Worldline brand | Verifone® | PAX® | CASTLES TECHNOLOGY | Worldline

PRINTER MOUNT OPTIONS

Small Printer Mount
(Use with Collar Arm* only)

Medium Printer Mount
(Use with Collar Arm* only)

Large Printer Mount
(Use with Collar Arm* only)

*Extension Arm is 8" (200mm) Long

SCANNER MOUNT OPTION

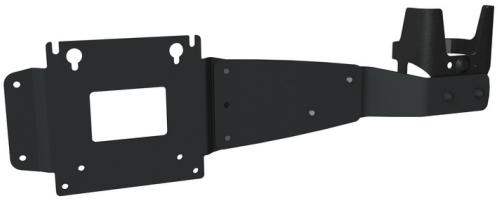

Scanner Mount

Attaches to 75/100MM VESA Monitors
from 15" (381mm) to 20" (508mm) wide

EXAMPLE CONFIGURATIONS

Single Monitor Mount

Dual Monitor Mount with
Printer Mount

Dual Monitor Mount with
Payment Mount

MM-1000 FOR EXISTING POLE UPGRADES

PART NUMBERS AND DETAILS

MM-10-201

Description	Collar Mount - Use with existing 45mm Diameter Poles
Shipping Dimensions	4.56" L x 4.56" W x 3.56" D
Shipping Weight (lbs/kg)	0.47/0.21
Note:	Use for attaching Single or Double Pivot Monitor Mount close to your existing 1.75" (45mm) Diameter Pole. Rotates up to 320°

MM-10-202

Description	Collar Arm 8" (200mm) - Use with existing 45mm Diameter Poles
Shipping Dimensions	5.13” L X 3.62” W X 8.0” D
Shipping Weight (lbs/kg)	3.00/1.36
Note:	Use for positioning your Payment Terminal and Printer Mounts away from existing pole. May also be used to extend Monitor Mount away from pole. Rotates up to 320°

MM-10-301

Description	Monitor Mount - Single Pivot (Up/Down) for 75/100MM VESA Monitors
Shipping Dimensions	4.56” L X 4.56” W X 3.56” D
Shipping Weight (lbs/kg)	0.89/0.40
Note:	Max Monitor Weight: 15lbs. +/-68°* Tilt

MM-10-302

Description	Monitor Mount - Double Pivot (Up/Down, Left/Right) for 75/100MM VESA Monitors
Shipping Dimensions	4.56” L X 4.56” W X 5.56” D
Shipping Weight (lbs/kg)	1.16/0.53
Note:	Max Monitor Weight: 15lbs. +90°/-32°* Tilt. Up to 330°* Rotation

*tilt/rotation limits are subject to monitor size and position on pole

MM-1000 FOR EXISTING POLE UPGRADES

PART NUMBERS AND DETAILS

MM-10-401

Description	Payment Terminal Mount - Compatible with any FlexiPole Backplate
Shipping Dimensions	5.06” L X 4.62” W X 8.06” D
Shipping Weight (lbs/kg)	0.76/0.34
Note:	To mount a Havis Stand Metal Conversion - use MM-10-402 and contact Havis Sales for appropriate Conversion Part Number FlexiPole Backplate required to complete this product Up to 180° Rotation. -21°/+180° Tilt*

MM-10-501

Description	Small Printer Mount - Up to 180° Rotation
Shipping Dimensions	7.13” L X 7.13” W X 3.88” D
Shipping Weight (lbs/kg)	1.19/0.54
Note:	For Printers with bases up to 5.7" (145mm) Wide x 6" (153mm) Deep

MM-10-505

Description	Medium Printer Mount - Up to 180° Rotation
Shipping Dimensions	9” L X 7” W X 3” D
Shipping Weight (lbs/kg)	2.00/0.91
Note:	For Printers with bases up to 7.9" (201mm) Wide x 5.9" (151mm) Deep

MM-10-502

Description	Large Printer Mount - Up to 180° Rotation
Shipping Dimensions	12.63” L X 8.13” W X 3.88” D
Shipping Weight (lbs/kg)	2.61/1.18
Note:	For Printers with bases up to 7.8" (198mm) Wide x 11.26" (286mm) Deep

MM-1000 FOR EXISTING POLE UPGRADES

PART NUMBERS AND DETAILS

MM-10-601		
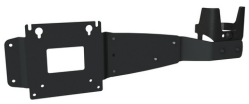	Description	Scanner Mount for Handheld Scanners
	Shipping Dimensions	5.18” L X 4.50” W X 10.38” D
	Shipping Weight (lbs/kg)	3.14/1.42
	Note:	Works with VESA Monitors from 15" (381mm) to 20" (508mm) Wide

MM-1000 FOR EXISTING POLE UPGRADES

PRODUCT DIMENSIONS

Single Pivot Monitor Arm

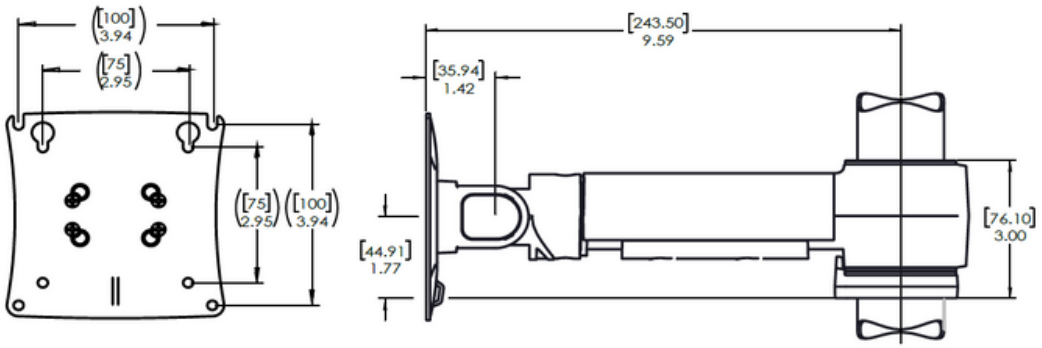

Double Pivot Monitor Arm

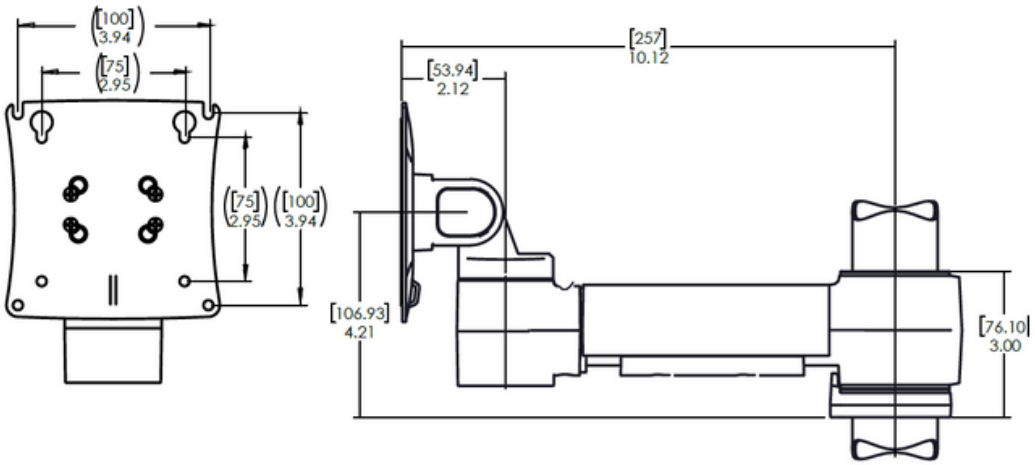

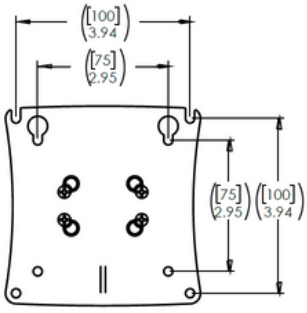

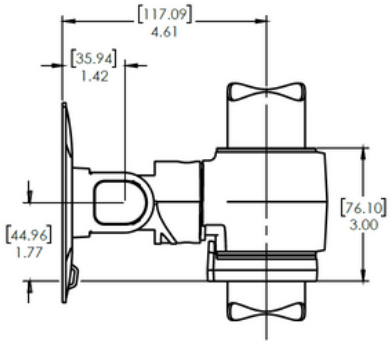

Single Pivot Monitor Mount

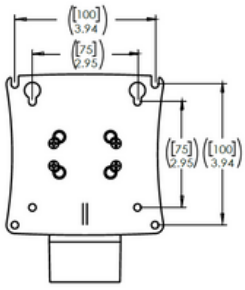

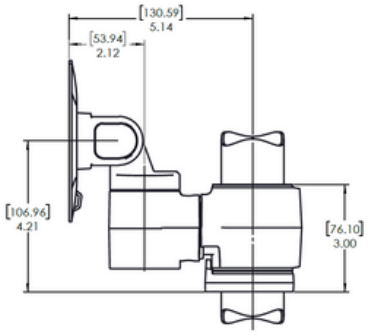

Double Pivot Monitor Mount

MM-1000 FOR EXISTING POLE UPGRADES

PRODUCT DIMENSIONS

Payment Terminal Mount
with MM-10-202

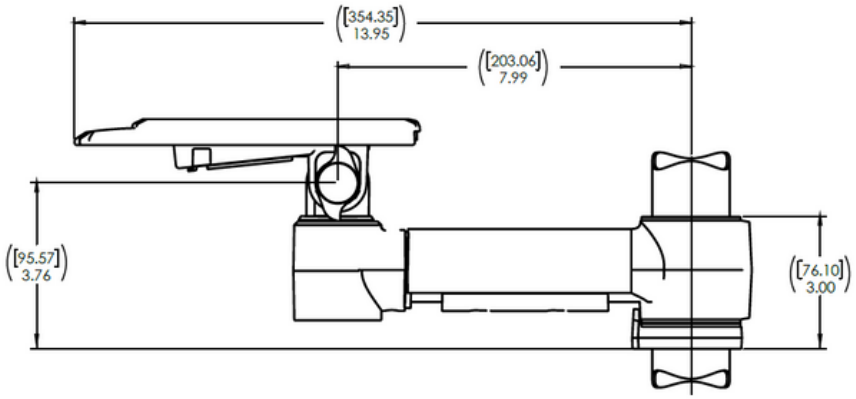

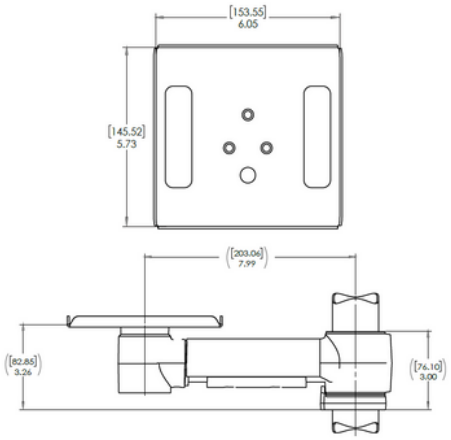

Small Printer Mount

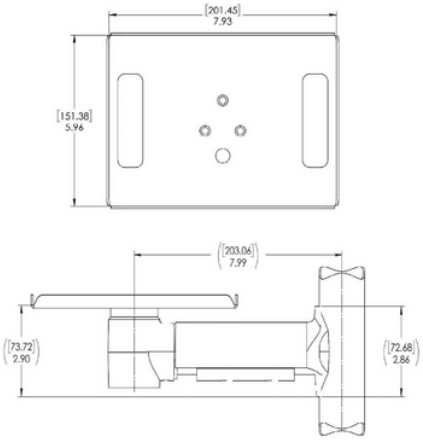

Medium Printer Mount

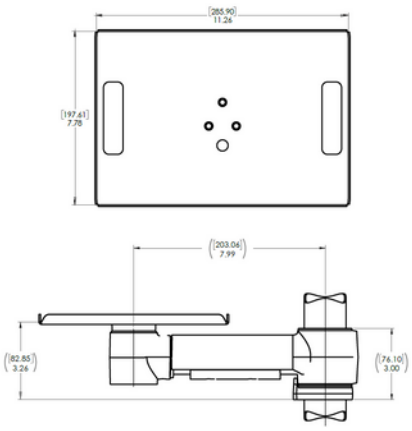

Large Printer Mount
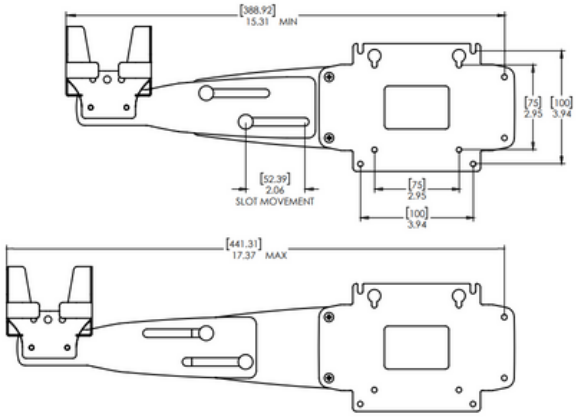
Scanner Mount