INSTALLATION INSTRUCTIONS

TOOLS LIST:
1. #2 PHILLIPS SCREW OR DRILL DRIVER
2. 3/16" HEX KEY

ASSEMBLY STEPS:
1. SLIDE THE ***MONITOR PIVOT ASSEMBLY*** ONTO THE ***POLE*** AND HOLD AT THE DESIRED HEIGHT.
2. TIGHTEN THE ***2X 1/4-20 SOCKET HEAD SCREWS*** TO SECURE THE ***MONITOR PIVOT ASSEMBLY*** TO THE ***POLE***.
3. ASSEMBLE THE ***UPPER 2X M4 X 10MM LONG PHILLIPS SCREWS*** INTO TOP HOLES OF ***MONITOR*** LEAVING ABOUT 1/8" OF SPACE BETWEEN THE BACK OF THE ***MONITOR*** AND THE SCREW HEAD, THEN PLACE THE ***MONITOR*** ONTO ***MONITOR BRACKET*** USING EITHER THE ***VESA 100MM SLOT*** OR ***VESA 75MM KEYHOLE*** PATTERN. SEE: **DETAIL A**
4. WITH THE ***MONITOR*** RESTING ON THE ***MONITOR PIVOT ASSEMBLY*** INSTALL THE ***LOWER 2X M4 X 10MM LONG PHILLIPS SCREWS*** AND TIGHTEN BOTH THE ***UPPER 2X M4 X 10MM LONG PHILLIPS SCREWS*** AND ***LOWER 2X M4 X 10MM LONG PHILLIPS SCREWS*** TO SECURE THE ***MONITOR***.
5. **OPTIONAL**: INSTALL THE ***6" BLACK CABLE TIE*** THROUGH THE ***MONITOR BRACKET BRIDGE LANCE*** THEN LOOP THE ***6" BLACK CABLE TIE*** MAKING SURE THE ***MONITOR CABLES*** ARE INSIDE THE LOOP AND SECURE BY PULLING ***6" BLACK CABLE TIE*** TIGHT. SEE: **DETAIL B.**
6. SCAN QR CODE ON LABEL OR REFERENCE THE FOLLOWING LINK FOR STEPS ON ADJUSTING THE TENSION OF THE MONITOR TILTING FEATURE: https://youtu.be/jrPS0C5gSrE

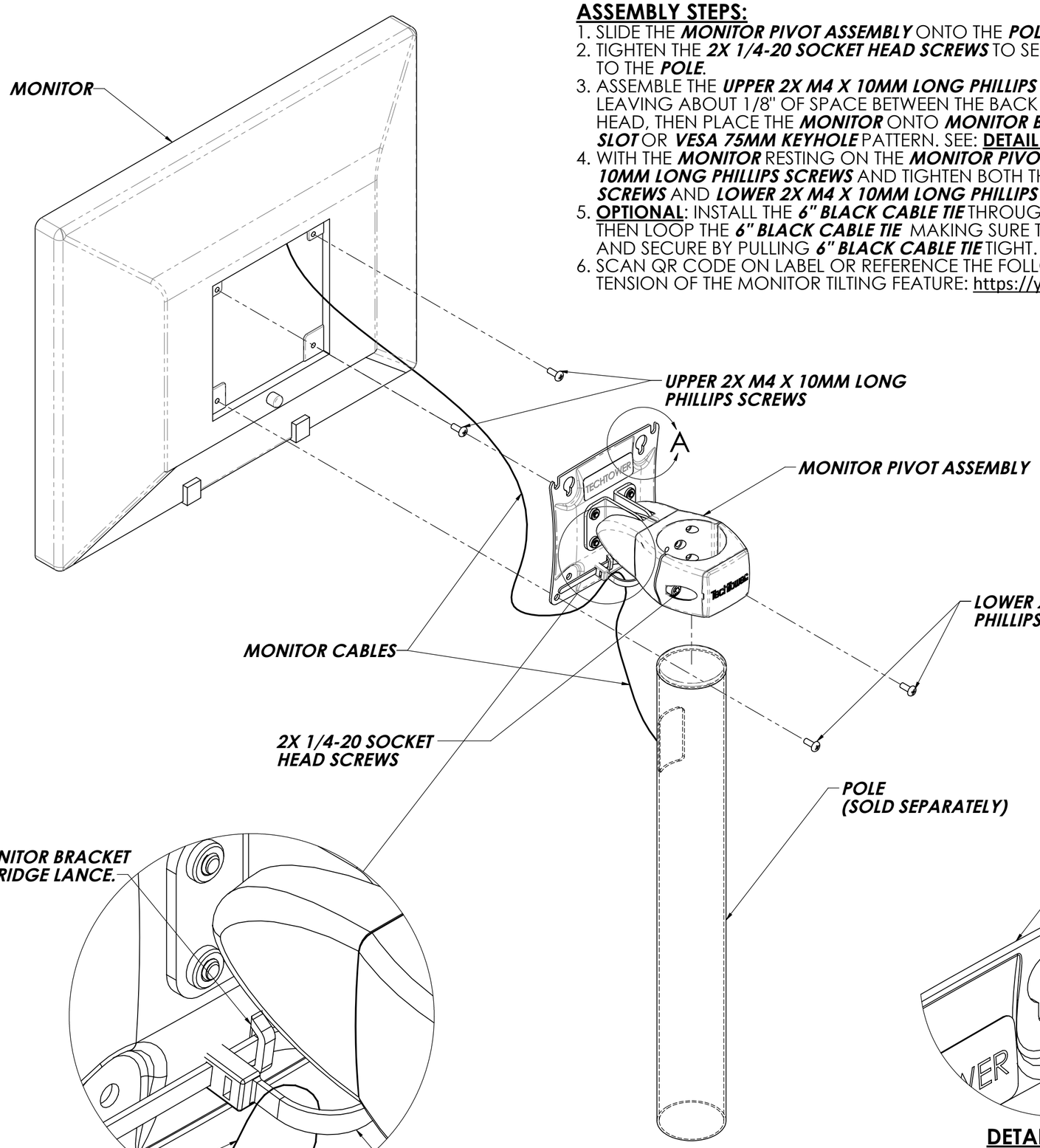

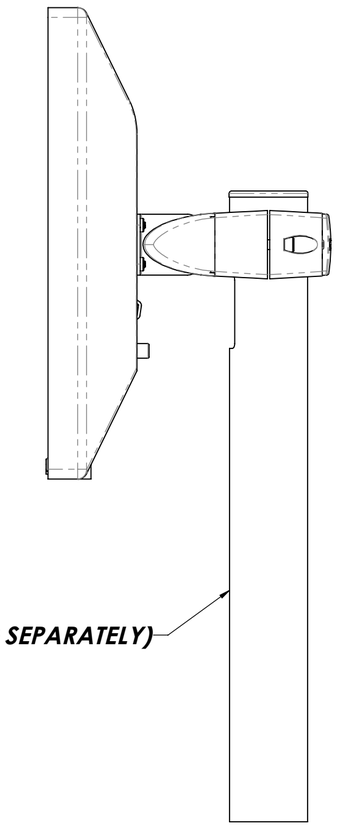

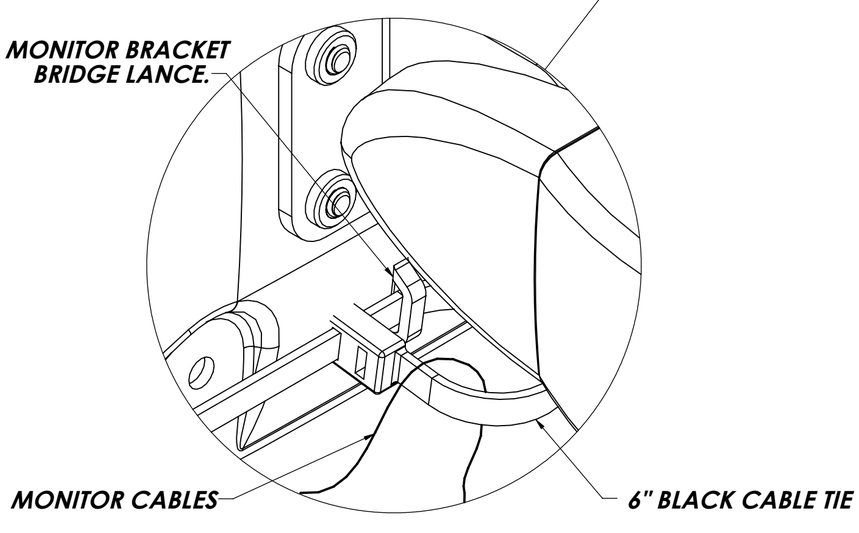

DETAIL B

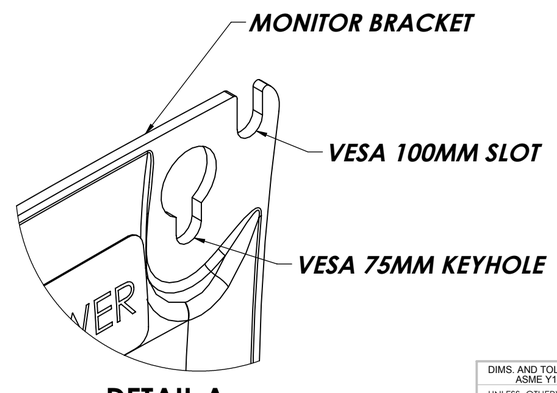

DETAIL A

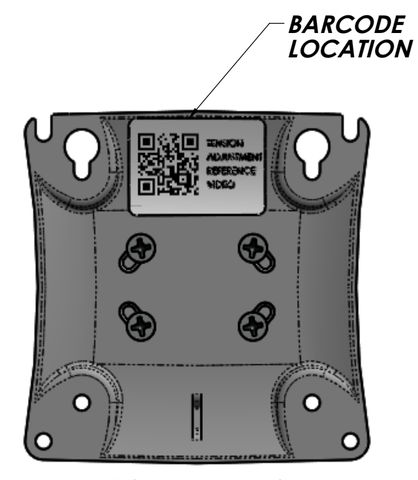

FRONT VIEW OF MONITOR MOUNTING BRACKET

REV.	DESCRIPTION	DATE	BY	CHK'D
A		09/23/15	JEB	

DIMS. AND TOLERANCES PER ASME Y14.5 - 1994	DRAWN J. BROWN	HAVIS
UNLESS OTHERWISE SPECIFIED DIMENSIONS ARE IN INCHES TOLERANCES ARE:	DATE 9/23/2015	
	CHECKED	TITLE TECHTOWER, CUSTOMER INSTRUCTIONS, MONITOR PIVOT, SINGLE (UP/DOWN) FOR ONE MONITOR, FIXED POLE CLAMP INCLUDED
FRACTIONAL ± 1/32	DATE	
2 PLC. DEC. ± .03	DO NOT SCALE DRAWING	
3 PLC. DEC. ± .010	MATERIAL N/A	
ANGULAR ± 0°30'	FINISH N/A	SIZE C · DWG. NO. 367-4008-11 · REV. A · SHEET 1 OF 1

THE INFORMATION CONTAINED IN THIS DRAWING IS THE SOLE PROPERTY OF HAVIS AND REPRODUCTION IN PART OR IN WHOLE WITHOUT THE WRITTEN PERMISSION OF HAVIS IS PROHIBITED.